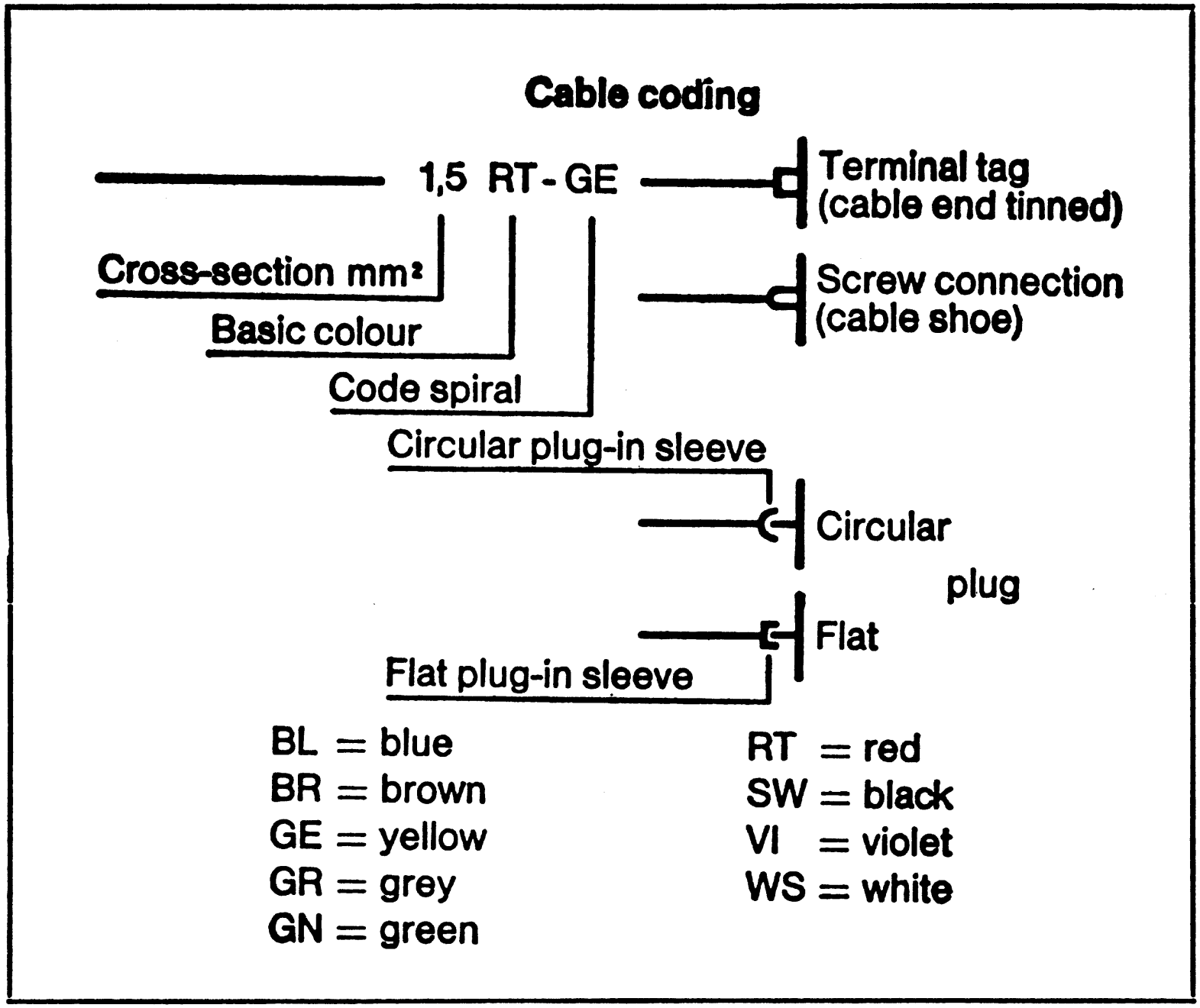


Number following colour code = cable number
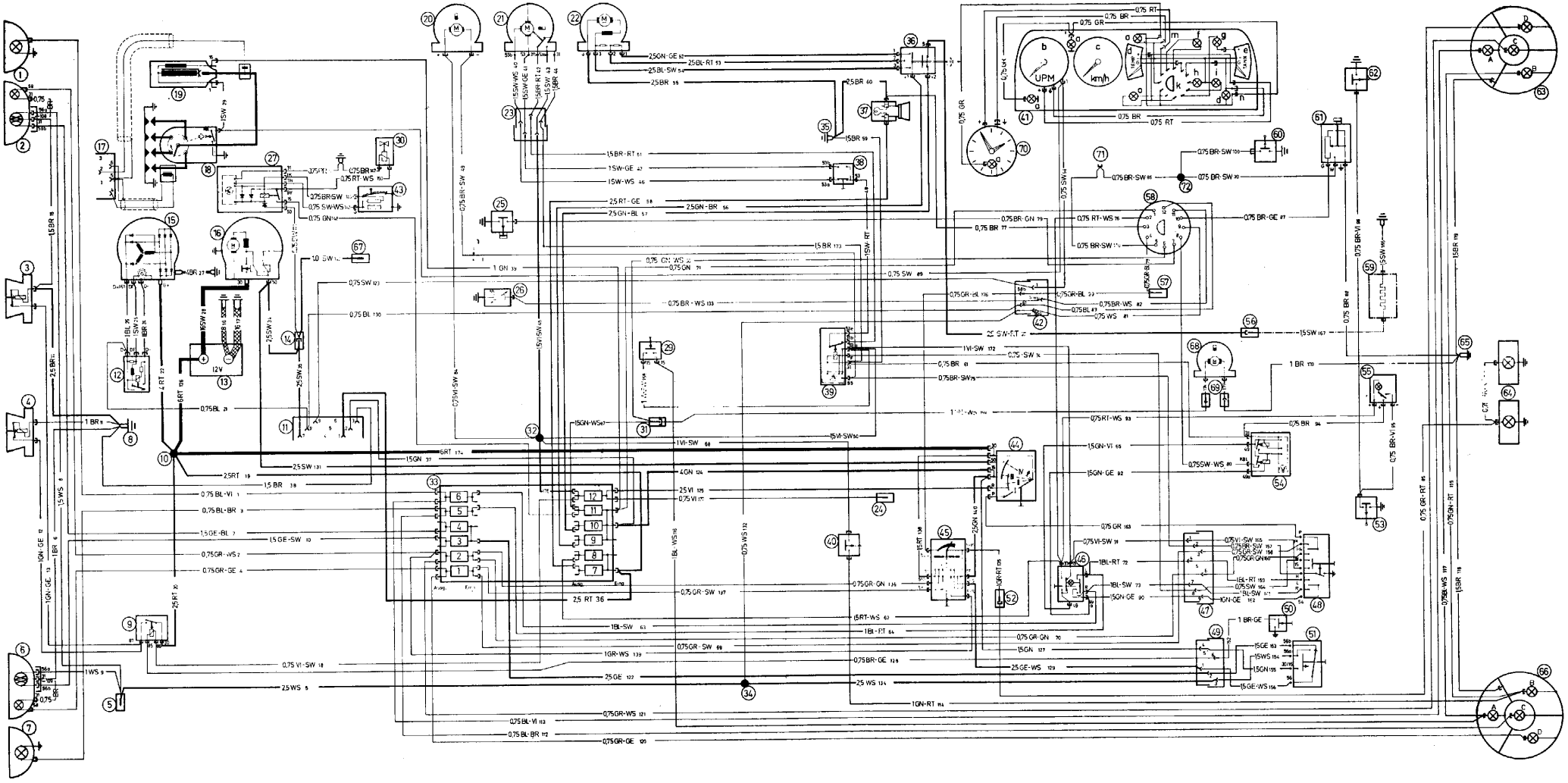
# Elektrischer Schaltplan BMw 2002 tii (Modell 71)